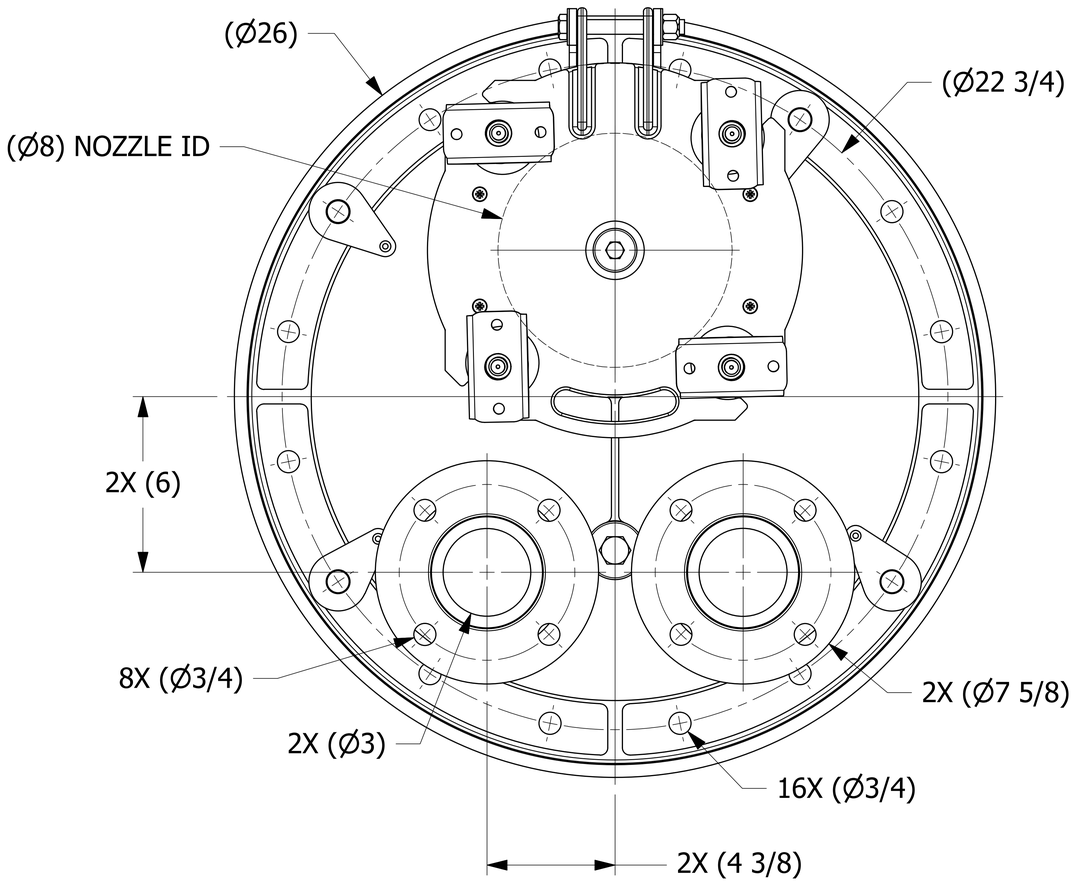


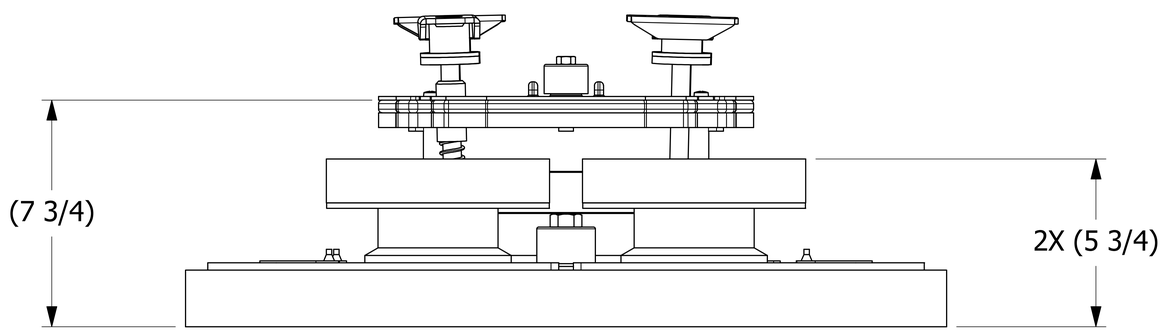


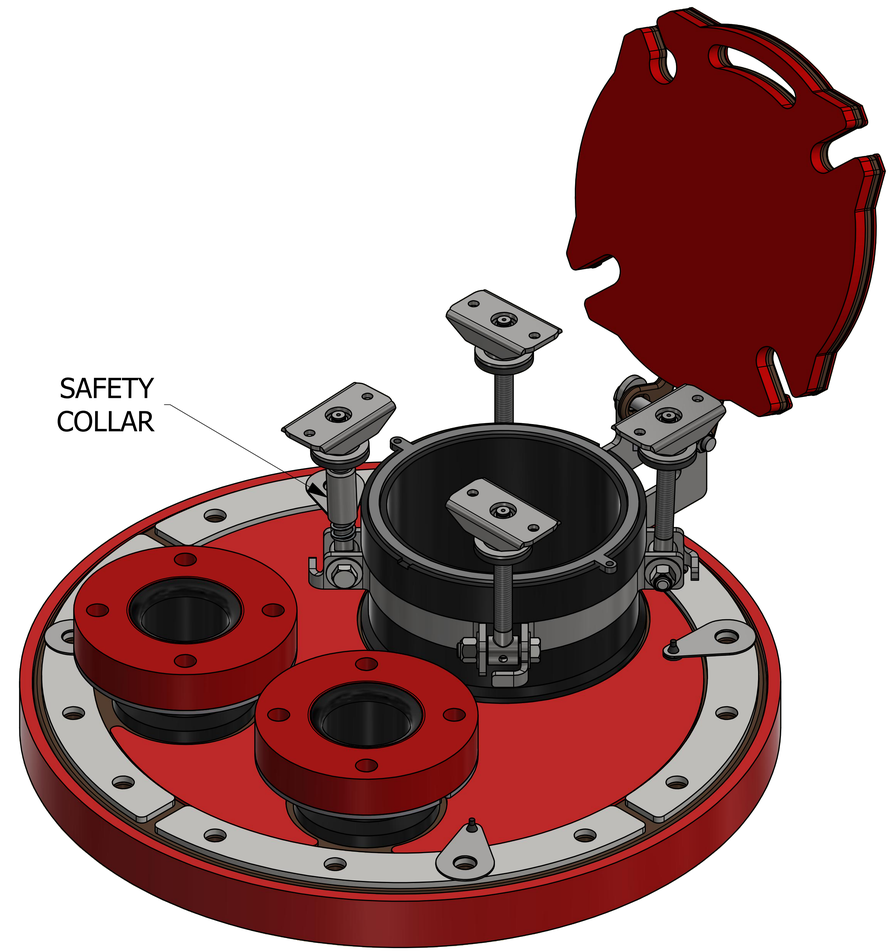


ISOMETRIC VIEW

SALES DRAWING SALES DRAWING

SALES DRAWING SALES DRAWING

NOTES:
1. ALL FASTENERS TO BE HAND TIGHTENED ONLY. DO NOT USE ANY TOOLS.
2. SEALS FROM TTG0129A AND SEGMENTED WASHERS TO BE SHIPPED LOOSE.
3. SHIP INSTALLATION INSTRUCTIONS WITH PLATE.
4. GASKET MATERIAL IS BLACK EPDM PEROXIDE CURED.

| REV | BY | DATE | DESCRIPTION |
|---|---|---|---|
| A | JG | 10-9-18 | RELEASED FOR PRODUCTION |

UNLESS OTHERWISE SPECIFIED DIMENSIONAL TOLERANCES
FRACTIONAL: ±1/16
X.XX: ±.03
X.XXX: ±.015
ANGULAR: ±1°
DEBURR ALL SHARP EDGES.
ALL MACHINED SURFACES TO HAVE A 125 RMS FINISH UNLESS NOTED OTHERWISE.
THIRD ANGLE PROJECTION

| | |
|---|---|
| DRAWN BY: | JG |
| CHECKED BY: | EJF |
| PROTOTYPE BY: | JG |
| PROTOTYPE DATE: | 8/27/2018 |
| APPROVED FOR PRODUCTION BY: | EJF |
| PRODUCTION DATE: | 10/9/2018 |

SALCO PRODUCTS, INC.

PART NAME: TRUCK MANWAY ASSEMBLY 18"

MATERIAL: SALCO PE/CS/SS/EPDM

PROJECT #: H180817 | SHEET #: 1 OF 1 | SCALE: 1:1

DRAWING #: E47750 | PART #: HSFPTT1803DFUHA02

THIS PRINT, PROPERTY OF SALCO PRODUCTS INC, CONTAINS PROPRIETARY INFORMATION AND MUST NOT BE COPIED, REPRODUCED, OR USED DETRIMENTALLY TO OUR INTEREST.